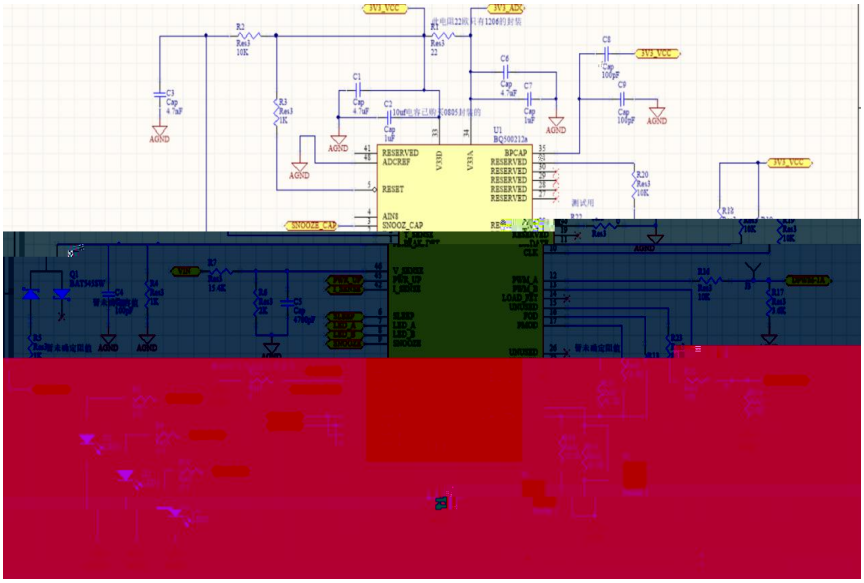

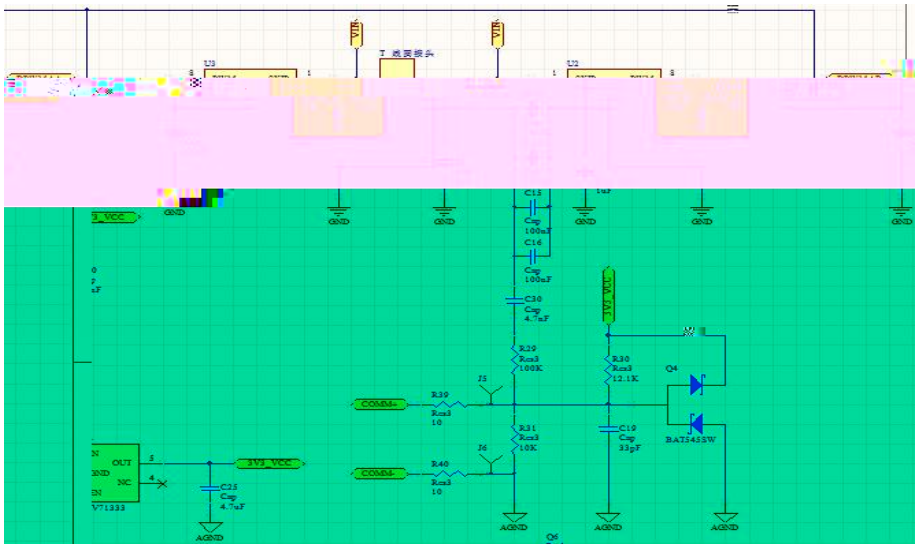
VIN
VIN
U3
U2
T_摄录接头
GND
C13
Cap
100uF
C16
Cap
100uF
C30
Cap
4.7uF
R29
Res3
100K
R30
Res3
12.1K
3V3_VCC
Q4
BAT54SW
C10
Cap
33pF
COMM+
R39
Res3
10
J5
R31
Res3
10K
COMM-
R40
Res3
10
J6
OUT
NC
TLV71333
3V3_VCC
C25
Cap
4.7uF
AGND
Q6

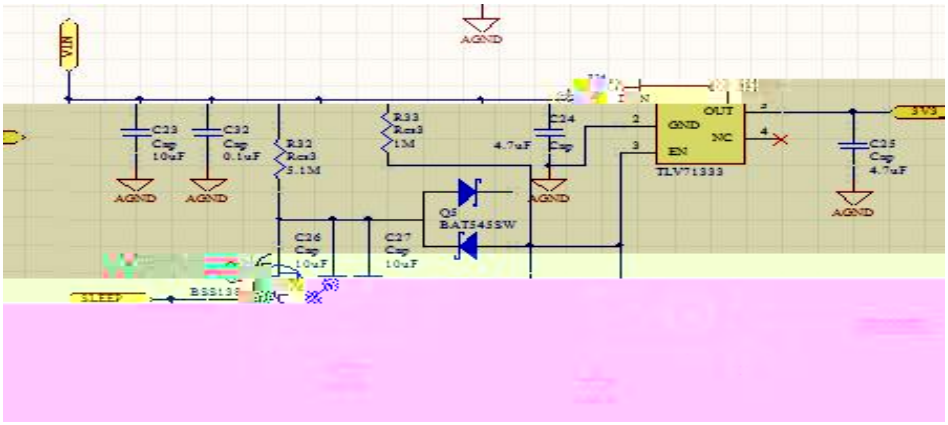
VIN
AGND
C23
Cap
10uF
C32
Cap
0.1uF
R32
Res3
5.1M
R33
Res3
1M
C24
Cap
4.7uF
GND
OUT
NC
EN
TLV71333
3V3
C25
Cap
4.7uF
Q5
BAT54SW
C26
Cap
10uF
C27
Cap
10uF
SLEEP
BSS138

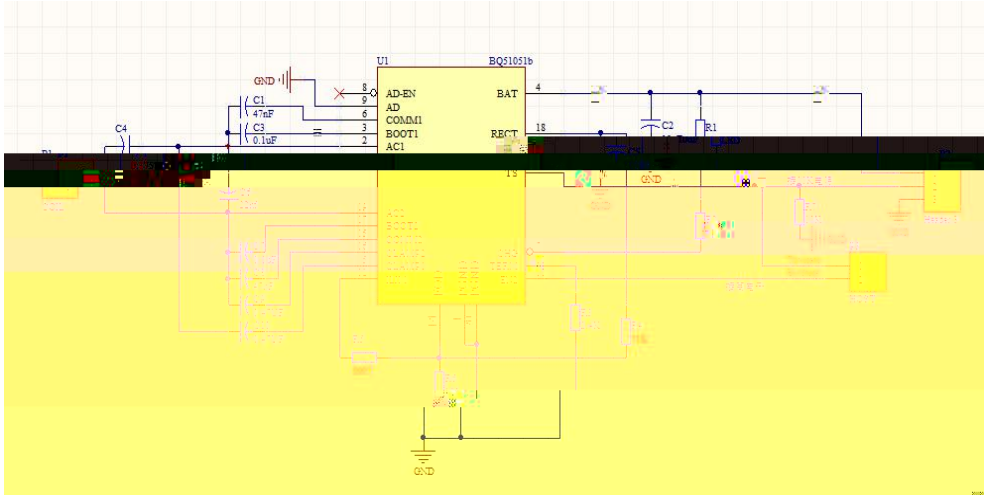
U1
BQ51051b
GND
C1
47nF
C3
0.1uF
C4
AD-EN
AD
COMM1
BOOT1
AC1
BAT
RECT
C2
R1
GND
GND

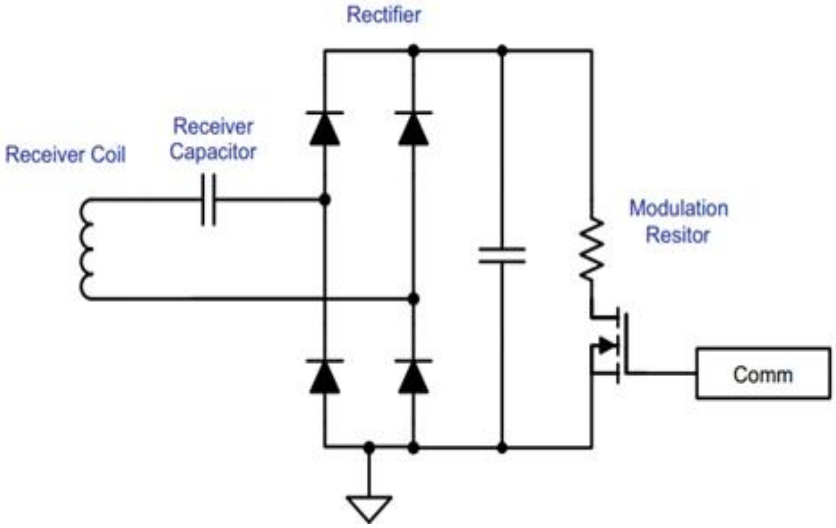
Rectifier
Receiver Coil
Receiver Capacitor
Modulation Resitor
Comm