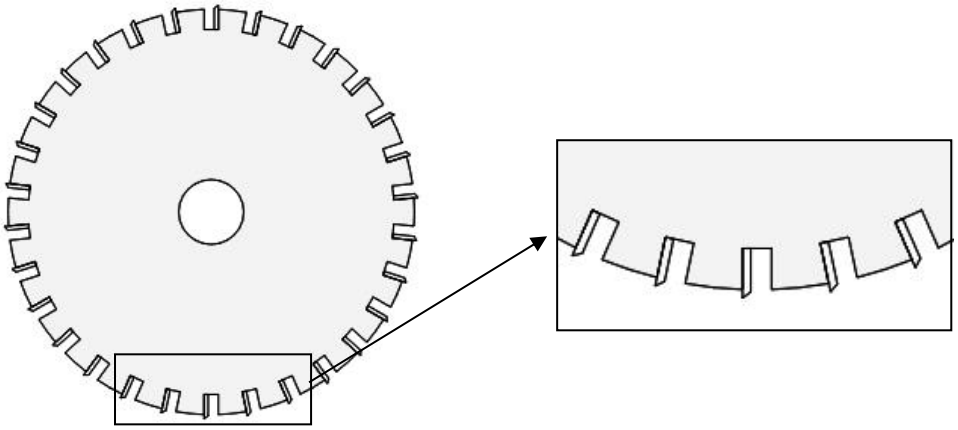

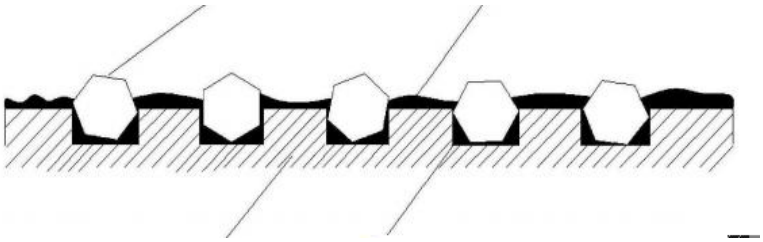

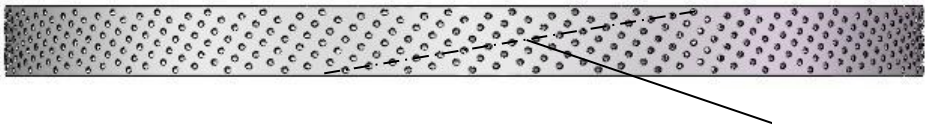

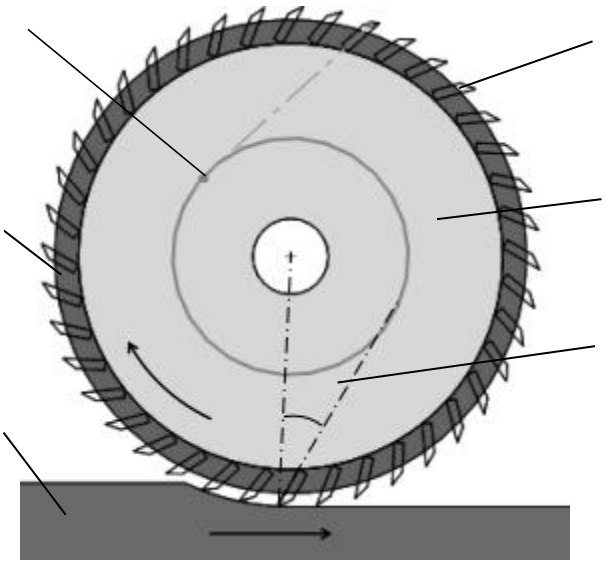

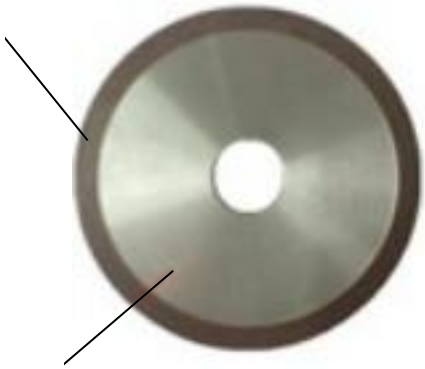

cm 1 2 3 4

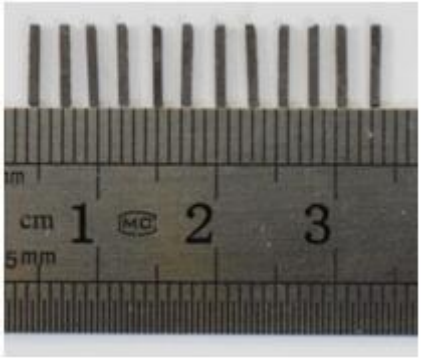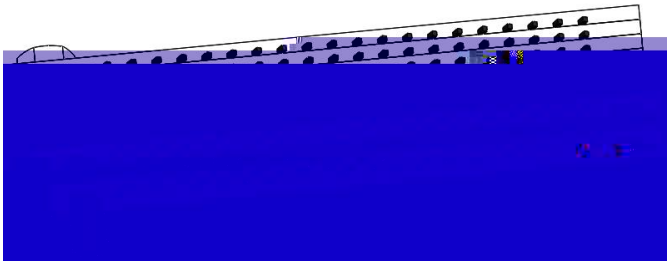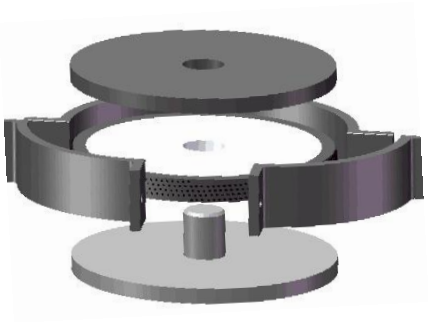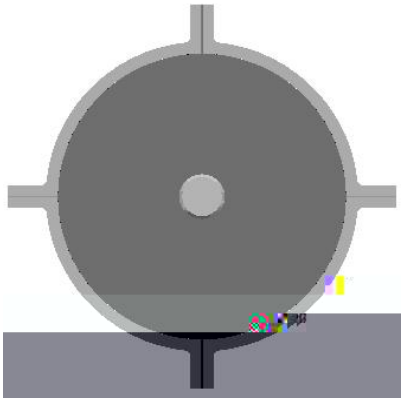
cm 1 2 3
5 mm