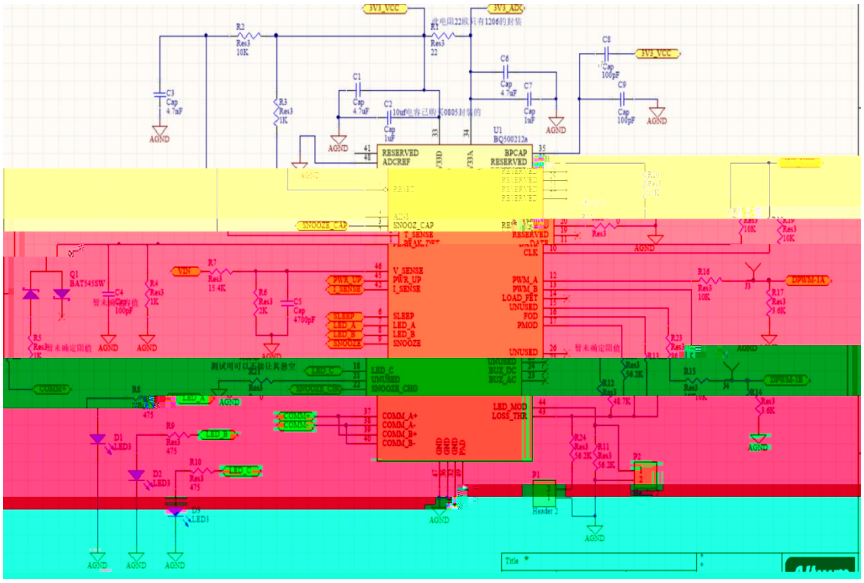

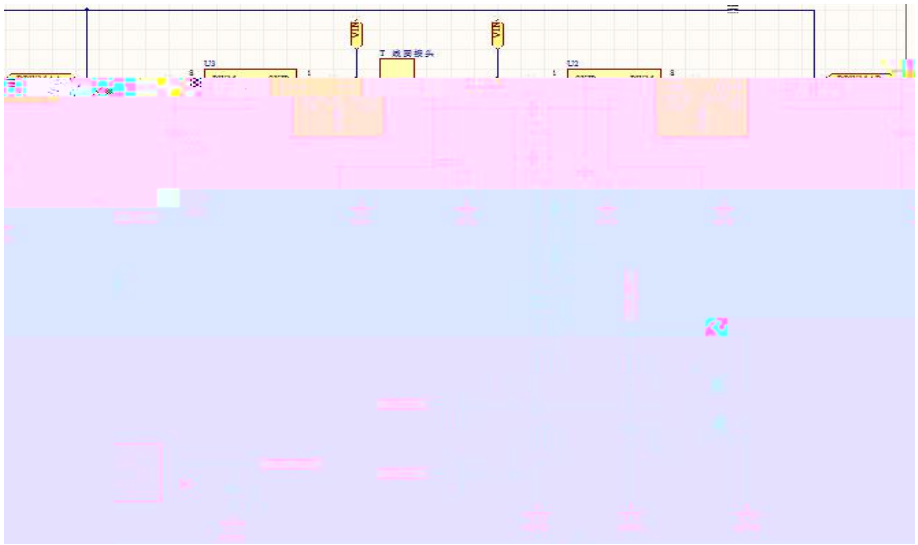

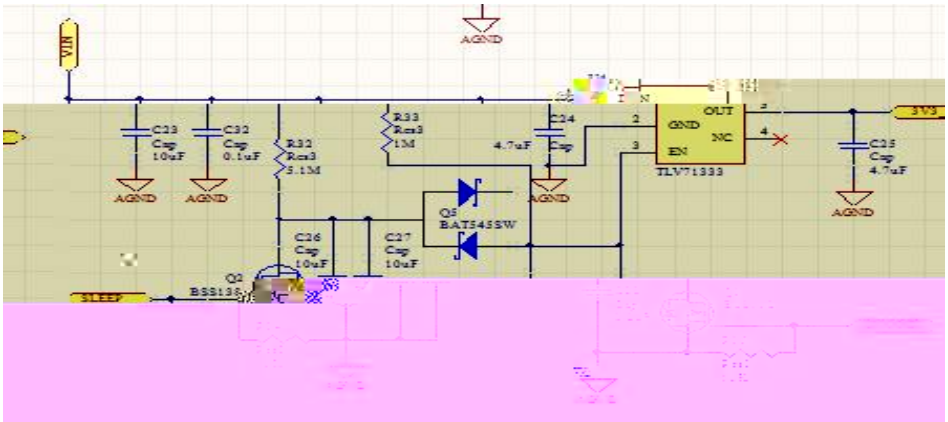
VIN
AGND
C23
Cap
10uF
C32
Cap
0.1uF
R32
Res3
5.1M
R33
Res3
1M
C24
Cap
4.7uF
OUT
GND
NC
EN
TLV71333
3V3
C25
Cap
4.7uF
Q5
BAT54SW
C26
Cap
10uF
C27
Cap
10uF
Q2
BSS138
SLEEP

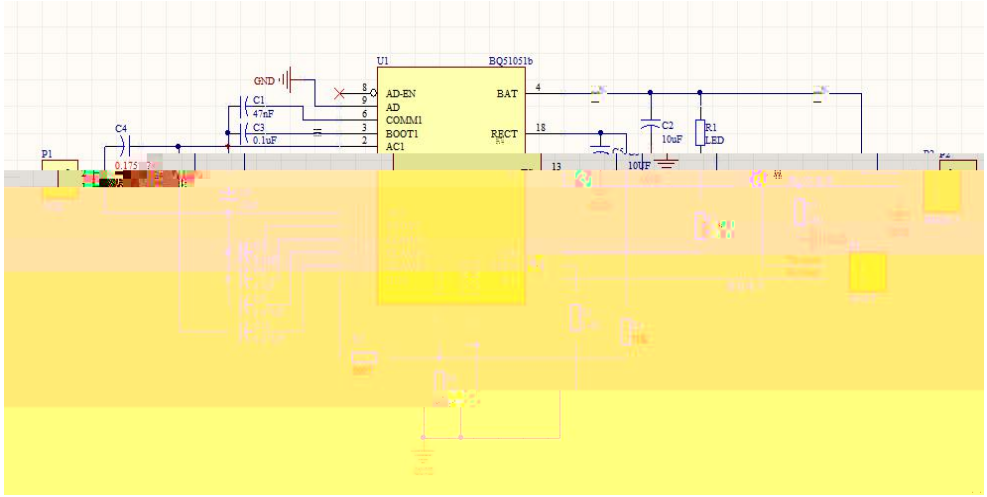
U1
BQ51051b
GND
C1
47nF
C3
0.1uF
C4
P1
AD-EN
AD
COMM1
BOOT1
AC1
BAT
RECT
C2
10uF
R1
LED
10UF

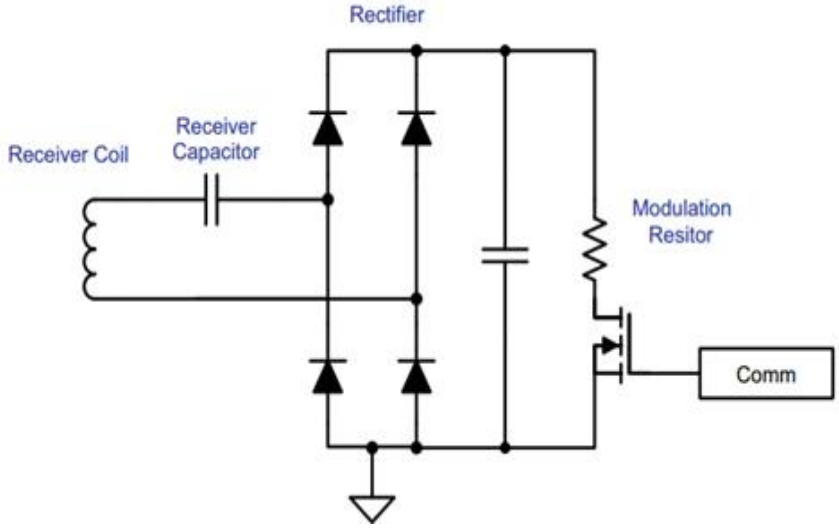
Rectifier
Receiver Coil
Receiver Capacitor
Modulation Resitor
Comm